Measurement-Free Error Correction in Rydberg atom array

Han Wang

HKUST(GZ)

2025-08-10

Necessity of quantum error correction

- Example: Performing universal and large-scale quantum computation on neutral-atom array

– Required gate error rate for performing useful algorithms: 10^{-10}.[1], [2]

– Physical gate error rate: 10^{-3}. [1], [2]

– Solution: Quantum error correction (QEC) process.[3], [4], [5]

How to perform quantum error correction

- QEC process and Toric code:[6]

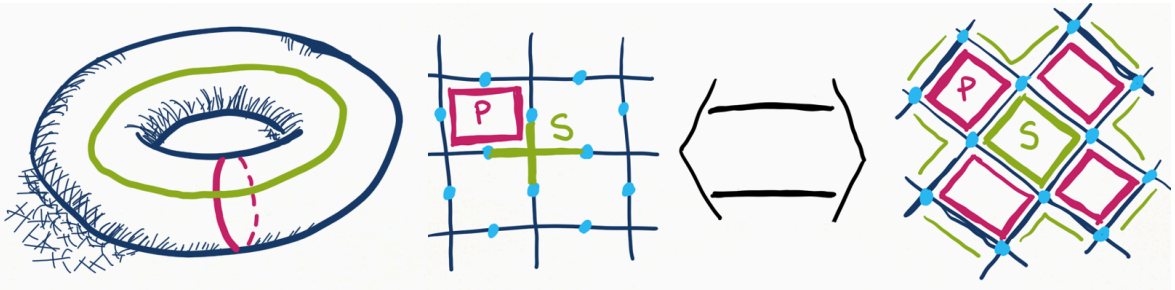

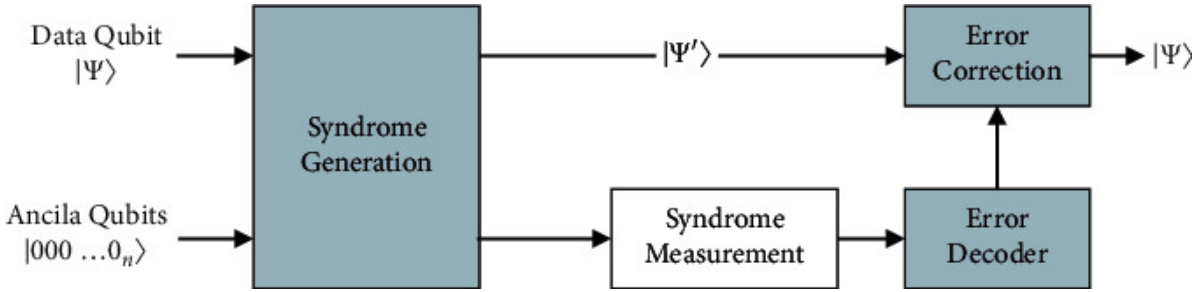

Quantum error correction in Rydberg atom platforms

- Advantage of QEC in Rydberg atom platforms[7]:

– Scalability

– Dynamic Reconfigurability therefore high connectivity.[8]

– High gate fidelity (over 99.9%)[9], [10] and long coherence time(> 1s)[7], [11], [12].

Quantum error correction in Rydberg atom platforms

- Bottlenecks:

– Time consuming Parity-check process [13], [14], [15]

– Long measurement time results in external error rate.[16]

– Laser Complexity and Crosstalk.

Parity-check process is time consuming[15]

- Moving to entangling zone ⇒ Gate operation ⇒ Back to storage ⇒ Repeating.
- The reported gate time is about 1μs[17] and the movement time is about hundreds of μ s.[7], [14]

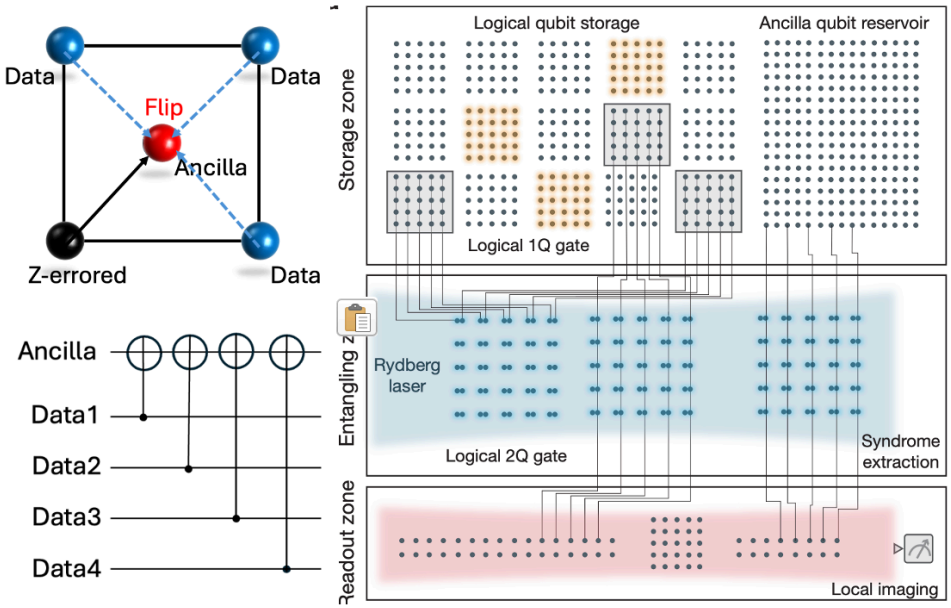

Measurement process is time time-consuming

- Moving the ancilla to readout zone ($100\mu s$) $\Rightarrow$ illuminating with focused imaging beam($500\ \mu s$) $\Rightarrow$ collect image
- The long measurement time will result in external error rate.

– Solutions:

– atom cooling during detection[18]

– measurement-free error correction.[19], [20]

Measurement-free error correction model

- The measurement-free error correction model in Toric code space:

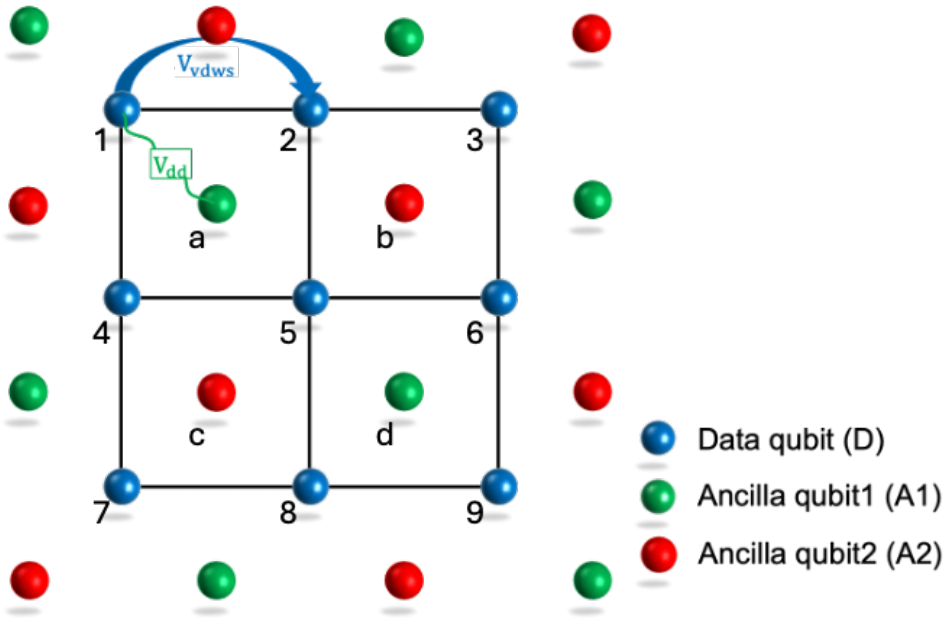

Step1: Parity-check process

- no error occurs ⇒ all qubits keep invariant after the effective pulse sequence.
- X-error ⇒ neighboring ancilla qubit A1(green dots) will flip.
- Z-error ⇒ neighboring ancilla qubit A2(red dots) will flip.

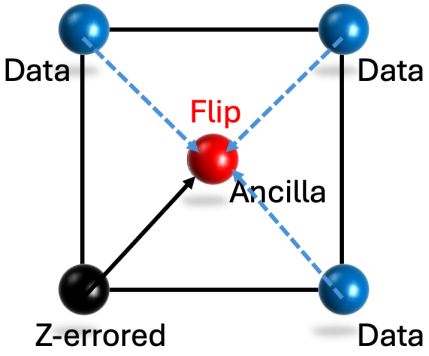

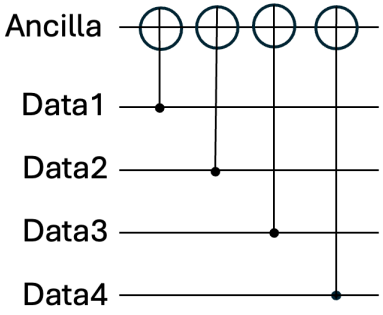

Step1: Parity-check process

- The one-step parity check process in one plaquette:

– The effective parity check can be implemented with ancilla qubit as control qubit and data qubit as target qubit.

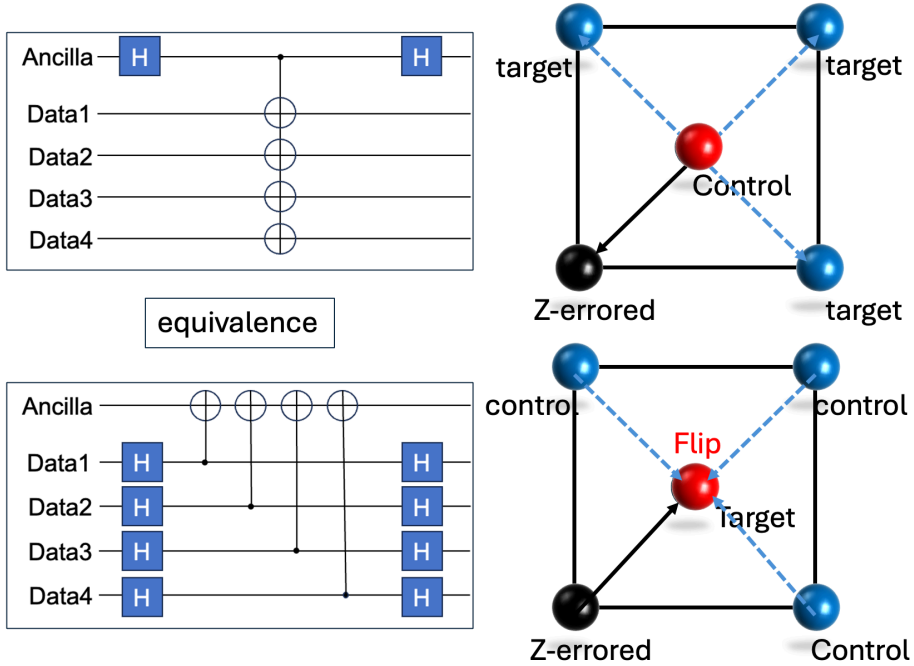

Step1: Parity-check process

- The one-step parity check process in more than one plaquettes:

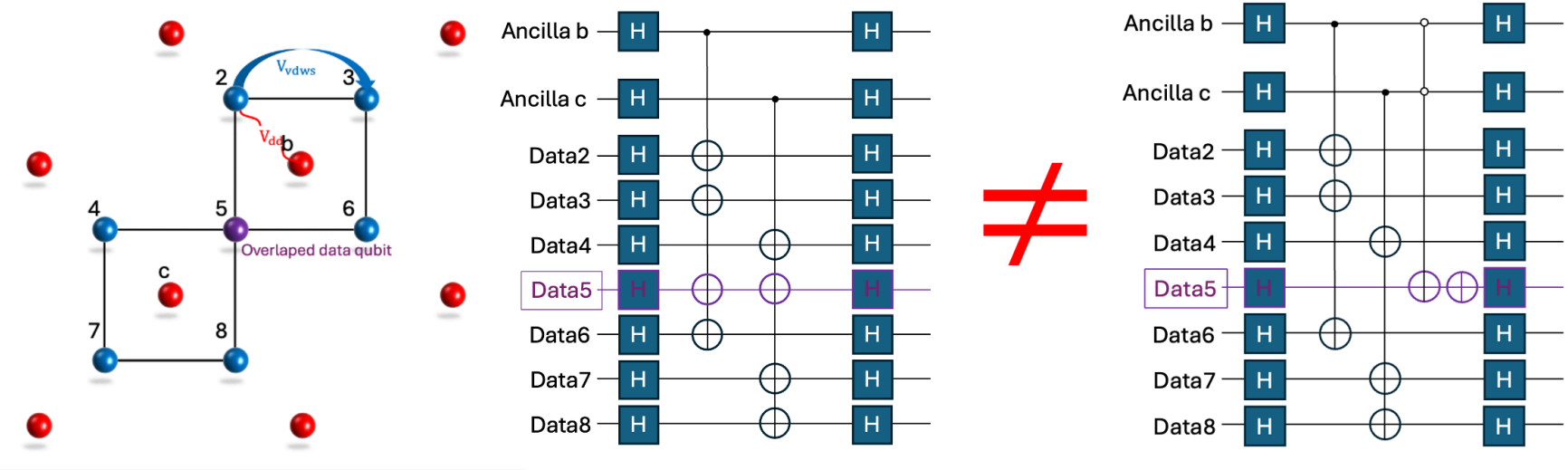

Modifying the pulse sequence to add a C_2NOT gate with neighboring ancilla qubit as control qubit and data qubit as target qubit.

Designed pulse sequence

- Including CNOT_4 gate and C_2NOT gate:

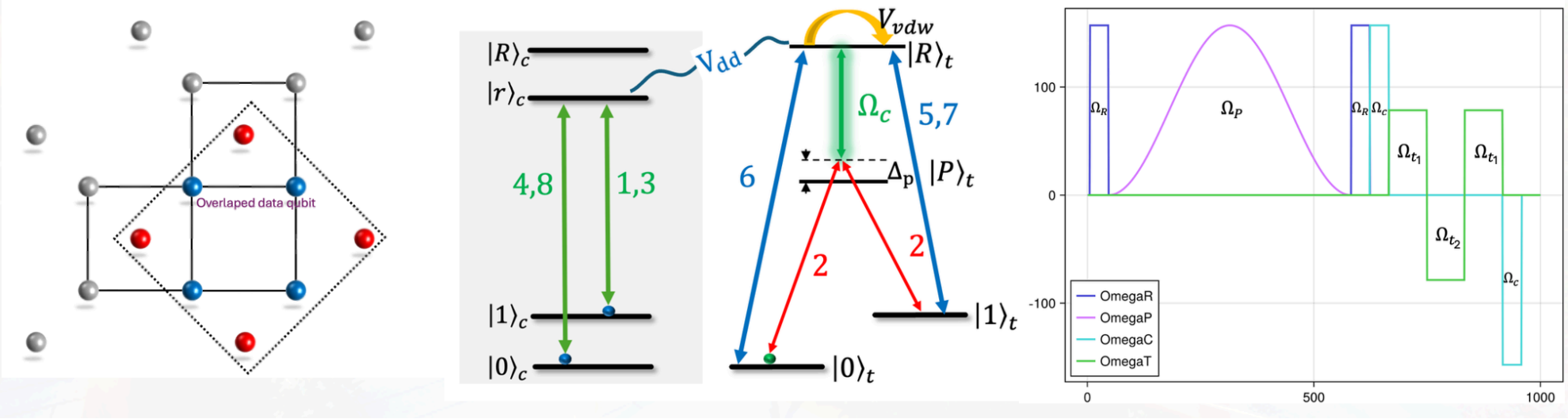

Bottlenecks in step1

- The equivalence of the pulse sequence of effective parity check process cannot be guaranteed.
- feasibility of the designed gate scheme in large system(experimental perspective)(for example, more than 2 species).

Step2: Error correcting C_2NOT gate

- Rule: Only if the ancilla qubits are both in state $|1\rangle$, the target data qubit will be flipped.
- gate scheme:

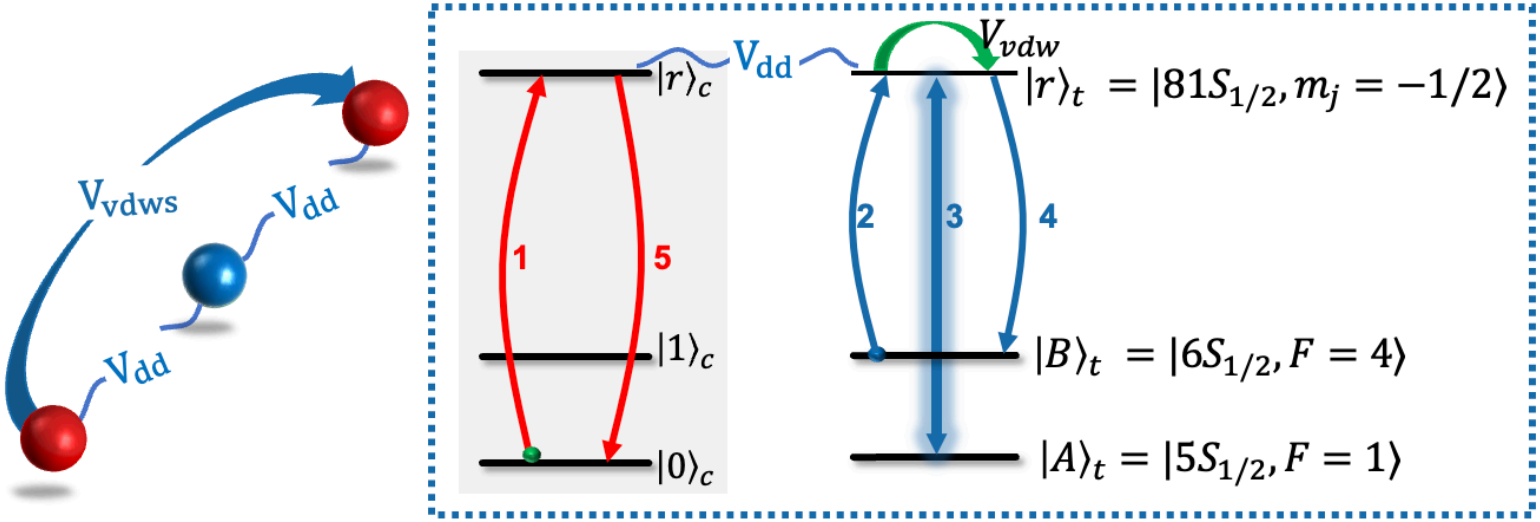

Bibliography

Bibliography

[1] C. Gidney and M. Ekerå, "How to factor 2048 bit RSA integers in 8 hours using 20 million noisy qubits," *Quantum*, vol. 5, p. 433, Apr. 2021, doi: 10.22331/q-2021-04-15-433.

[2] B. W. Reichardt *et al.*, "Fault-tolerant quantum computation with a neutral atom processor." [Online]. Available: https://arxiv.org/abs/2411.11822

[3] P. W. Shor, "Fault-tolerant quantum computation." [Online]. Available: https://arxiv.org/abs/quant-ph/9605011

[4] *Proceedings of the Royal Society of London. Series A: Mathematical, Physical and Engineering Sciences*, vol. 452, no. 1954, pp. 2551–2577, Nov. 1996, doi: 10.1098/rspa.1996.0136.

Bibliography

[5] E. Dennis, A. Kitaev, A. Landahl, and J. Preskill, "Topological quantum memory," *Journal of Mathematical Physics*, vol. 43, no. 9, pp. 4452–4505, Sep. 2002, doi: 10.1063/1.1499754.

[6] O. O. Khalifa, N. Amirah Bt Sharif, R. A. Saeed, S. Abdel-Khalek, A. N. Alharbi, and A. A. Alkathiri, "Digital System Design for Quantum Error Correction Codes," *Contrast Media & Molecular Imaging*, vol. 2021, p. 1101911, 2021, doi: 10.1155/2021/1101911.

[7] D. Bluvstein *et al.*, "Logical quantum processor based on reconfigurable atom arrays," *Nature*, vol. 626, no. 7997, pp. 58–65, Dec. 2023, doi: 10.1038/s41586-023-06927-3.

[8] I. Cong, H. Levine, A. Keesling, D. Bluvstein, S.-T. Wang, and M. D. Lukin, "Hardware-Efficient, Fault-Tolerant Quantum Computation with Rydberg Atoms." [Online]. Available: https://arxiv.org/abs/2105.13501

Bibliography

[9] S. J. Evered *et al.*, "High-fidelity parallel entangling gates on a neutral-atom quantum computer," *Nature*, vol. 622, no. 7982, pp. 268–272, Oct. 2023, doi: 10.1038/s41586-023-06481-y.

[10] M. Xue, S. Xu, X. Li, and X. Li, "High-fidelity and robust controlled- <mml:math xmlns:mml="http://www.w3.org/1998/Math/MathML"><mml:mi>Z</mml:mi></mml:math> gates implemented with Rydberg atoms via echoing rapid adiabatic passage," *Physical Review A*, vol. 110, no. 3, Sep. 2024, doi: 10.1103/physreva.110.032619.

[11] J. Z. Ludmir, Y. Huo, N. S. DiBrita, and T. Patel, "Modeling and Simulating Rydberg Atom Quantum Computers for Hardware-Software Co-design with PachinQo." [Online]. Available: https://arxiv.org/abs/2412.07181

Bibliography

[12] K. Wintersperger *et al.*, "Neutral atom quantum computing hardware: performance and end-user perspective," *EPJ Quantum Technology*, vol. 10, no. 1, Aug. 2023, doi: 10.1140/epjqt/s40507-023-00190-1.

[13] M. Endres *et al.*, "Atom-by-atom assembly of defect-free one-dimensional cold atom arrays," *Science*, vol. 354, no. 6315, pp. 1024–1027, 2016, doi: 10.1126/science.aah3752.

[14] D. Bluvstein *et al.*, "A quantum processor based on coherent transport of entangled atom arrays," *Nature*, vol. 604, no. 7906, pp. 451–456, Apr. 2022, doi: 10.1038/s41586-022-04592-6.

[15] D. Barredo, V. Lienhard, S. de Léséleuc, T. Lahaye, and A. Browaeys, "Synthetic three-dimensional atomic structures assembled atom by atom," *Nature*, vol. 561, no. 7721, pp. 79–82, Sep. 2018, doi: 10.1038/s41586-018-0450-2.

Bibliography

[16] I. I. Beterov and M. Saffman, "Rydberg blockade, Förster resonances, and quantum state measurements with different atomic species," *Phys. Rev. A*, vol. 92, no. 4, p. 42710, Oct. 2015, doi: 10.1103/PhysRevA.92.042710.

[17] H. Levine *et al.*, "High-Fidelity Control and Entanglement of Rydberg-Atom Qubits," *Physical Review Letters*, vol. 121, no. 12, Sep. 2018, doi: 10.1103/physrevlett.121.123603.

[18] M. Saffman, "Quantum computing with atomic qubits and Rydberg interactions: progress and challenges," *Journal of Physics B: Atomic, Molecular and Optical Physics*, vol. 49, no. 20, p. 202001, Oct. 2016, doi: 10.1088/0953-4075/49/20/202001.

[19] S. Heußen, D. F. Locher, and M. Müller, "Measurement-Free Fault-Tolerant Quantum Error Correction in Near-Term Devices," *PRX Quantum*, vol. 5, no. 1, Feb. 2024, doi: 10.1103/prxquantum.5.010333.

Bibliography

[20] M. A. Perlin, V. N. Premakumar, J. Wang, M. Saffman, and R. Joynt, "Fault-tolerant measurement-free quantum error correction with multiqubit gates," *Physical Review A*, vol. 108, no. 6, Dec. 2023, doi: 10.1103/physreva.108.062426.